S.No	REVISION	REVISION HISTORY	APPD	DATE

100 to 277V

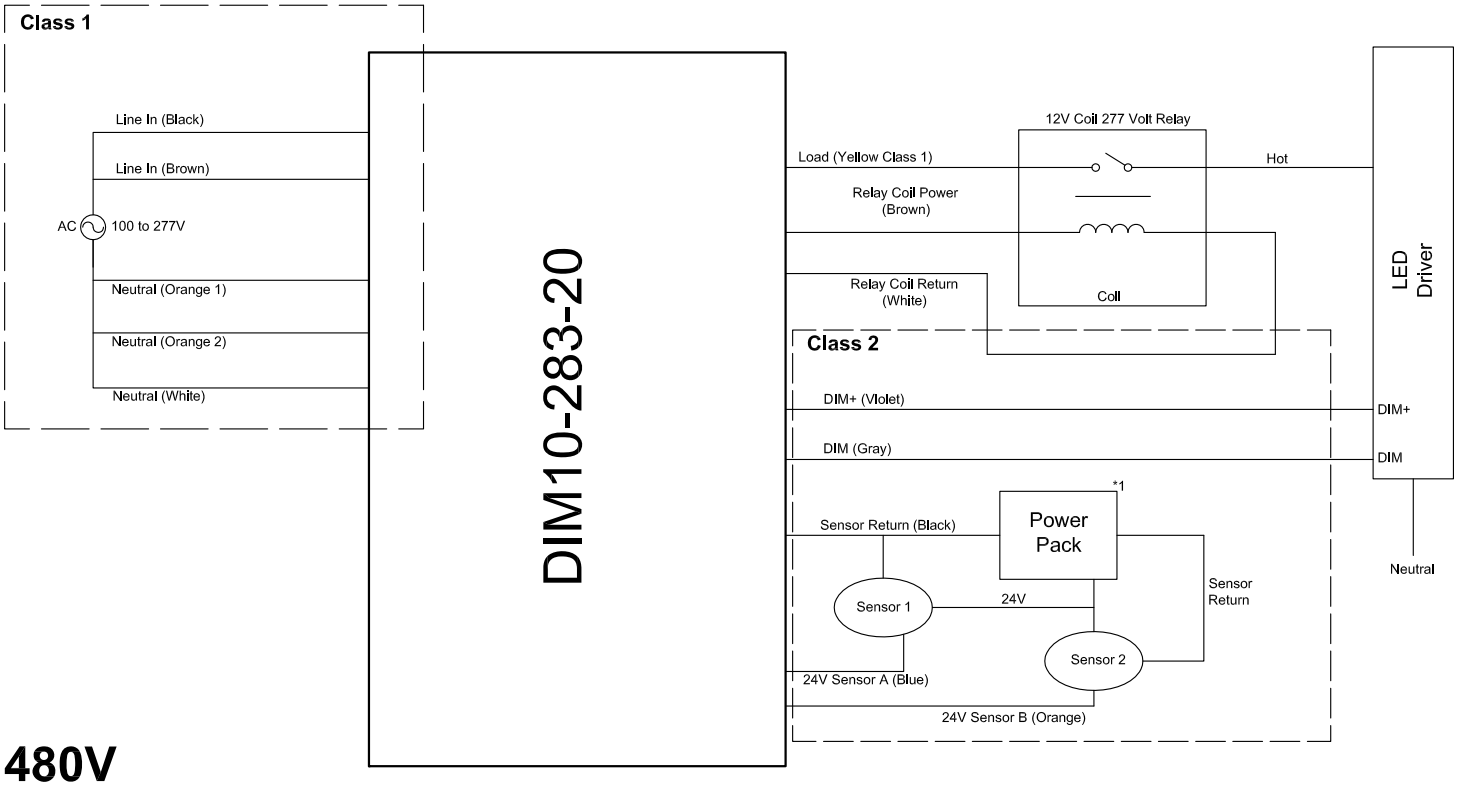

480V

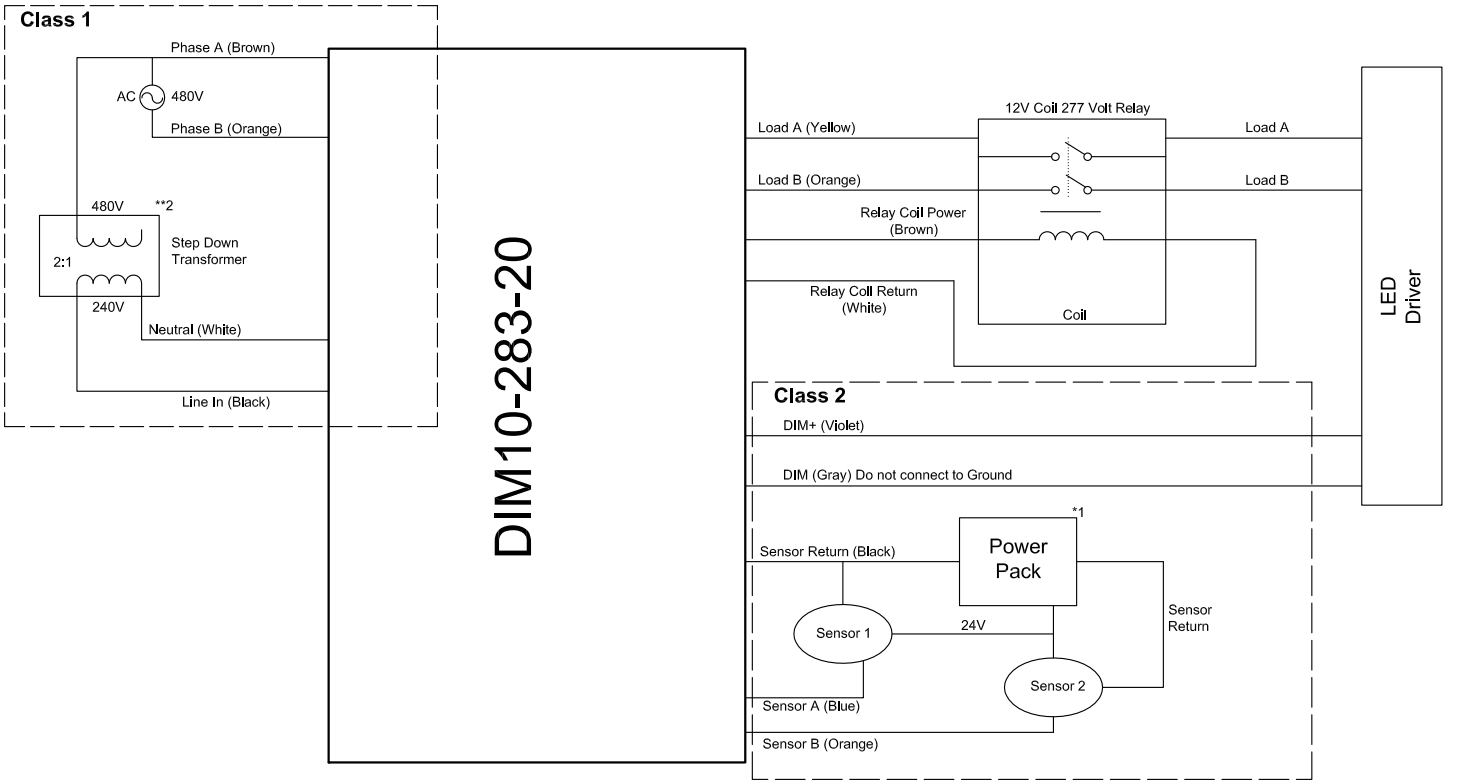

PROPRIETARY AND CONFIDENTIAL		IF ANY DOUBTS PLEASE ASK.		NAME	DATE	synapse
THE INFORMATION CONTAINED IN THIS DRAWING IS THE SOLE PROPERTY OF McWANE SERVICES (P) LTD. ANY REPRODUCTION IN PART OR AS A WHOLE WITHOUT THE WRITTEN PERMISSION OF McWANE SERVICES (P) LTD. IS PROHIBITED.			DRN	RS	05.05.16	TITLE
			CHD	AT	05.05.16	WIRING DIAGRAM
			APPD			
		INTERPRET GEOMETRIC TOLERANCING PER:	PRODUCT GROUP NEMA BOX			
		MATERIAL –	DRAWING FOR PRE - RELEASE			SIZE A3 / DRG No DIM10-283-20 / REV 0
NEXT ASSY	USED ON	FINISH				
APPLICATION		ALL DIMENSIONS ARE INCH				SCALE- NTS / WEIGHT / SHEET