S.No	REVISION	REVISION HISTORY	APPD	DATE

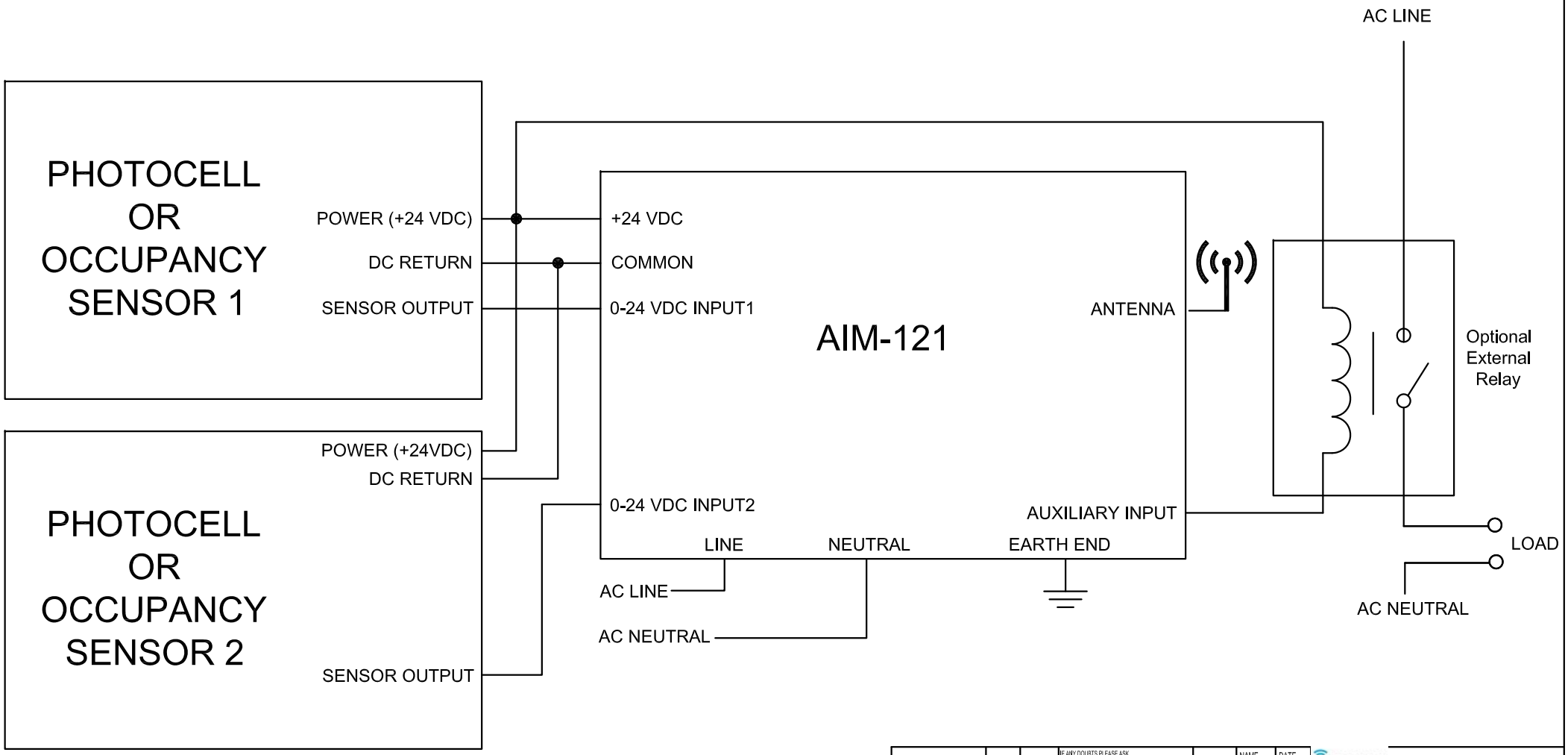

PROPRIETARY AND CONFIDENTIAL

THE INFORMATION CONTAINED IN THIS DRAWING IS THE SOLE PROPERTY OF McWANE SERVICES (P) LTD. ANY REPRODUCTION IN PART OR AS A WHOLE WITHOUT THE WRITTEN PERMISSION OF McWANE SERVICES (P) LTD. IS PROHIBITED.

NEXT ASSY | USED ON | APPLICATION

IF ANY DOUBTS PLEASE ASK.

INTERPRET GEOMETRIC TOLERANCING PER:

MATERIAL –

FINISH

ALL DIMENSIONS ARE INCH

	NAME	DATE
DRN	RS	03.05.16
CHD	AT	03.05.16
APPD		

PRODUCT GROUP

DRAWING FOR PRE - RELEASE

synapse

TITLE

AIM-121 WIRING DIAGRAM

SIZE	DRG No	REV
A3	AIM-121	0

SCALE- NTS | WEIGHT | SHEET